Work Order ID 58912

May 19, 2010 1:24:07 PM

Item ID: D2362-7 **Accept** **Setup Start**

Revision ID: **Stop**

Item Name: Support Bracket

Start Date: 5/19/10 **Start Qty:** 4.00 **Cust Item ID:**

Required Date: 5/25/10 **Req'd Qty:** 4.00 **Customer:**

Reference:

Run Start

Approvals: **Process Plan:** _____ **Date:** _____ **Tooling:** _____ **Date:** _____

Stop

QC: _____ **Date:** _____ **SPC (Y/N):** _____ **Date:** _____

Sequence ID/ Work Center ID	Operation Description	Set Up/ Run Hours	Draw Number	Draw Rev.	Plan Code	Accept Qty	Reject Qty	Reject Number	Insp. Stamp
Draw Nbr	**Revision Nbr**								
100 HAAS 1 HAAS CNC vertical machine #1	HAAS CNC VERTICAL MACHINING #1 **Memo** Machine per folio D2362-7□Deburr	0.00 0.00	DJP 10/06/03			4	Ø		
110 QC Quality Control	QC2- Inspect parts off machine FAI/FAIB **Memo**	0.00 0.00	DJP 10/06/03			4	Ø		
120 QC Quality Control	QC8- Inspect parts - second check **Memo**	0.00 0.00	DJP 10/06/03			4	Ø		

Dart Aerospace Ltd

W/O:		WORK ORDER CHANGES					
DATE	STEP	PROCEDURE CHANGE	By	Date	Qty	Approval Chief Eng / Prod Mgr	Approval QC Inspector

Part No: _____ PAR #: _____ Fault Category: _____ NCR: Yes No DQA: _____ Date: _____

Resolution: _____ Disposition: _____ QA: N/C Closed: _____ Date: _____

NCR:		WORK ORDER NON-CONFORMANCE (NCR)						
DATE	STEP	Description of NC Section A	Corrective Action Section B			Verification Section C	Approval Chief Eng	Approval QC Inspector
			Initial Chief Eng	Action Description Chief Eng	Sign & Date			

NOTE: Date & initial all entries

H:\fFORMS\Quality Assurance\approved QA\NCRWO RevE

Work Order ID 58912

May 19, 2010 1:24:07 PM

Item ID: D2362-7 **Accept** **Setup Start**

Revision ID: **Stop**

Item Name: Support Bracket

Start Date: 5/19/10 **Start Qty:** 4.00 **Cust Item ID:**

Required Date: 5/25/10 **Req'd Qty:** 4.00 **Customer:**

Reference:

Run Start

Approvals: **Process Plan:** _____ **Date:** _____ **Tooling:** _____ **Date:** _____

Stop

QC: _____ **Date:** _____ **SPC (Y/N):** _____ **Date:** _____

Sequence ID/ Work Center ID	Operation Description	Set Up/ Run Hours	Draw Number	Draw Rev.	Plan Code	Accept Qty	Reject Qty	Reject Number	Insp. Stamp
130	Identify as per dwg & Stock Location: NA	0.00							
Packaging	Memo	0.00	10-06-04			4	0		
Packaging									
140	QC21- Final Inspection - Work Order Release	0.00							10/06/04
QC	Memo	0.00							MF 10-6-4
Quality Control									

Dart Aerospace Ltd

W/O:		WORK ORDER CHANGES					
DATE	STEP	PROCEDURE CHANGE	By	Date	Qty	Approval Chief Eng / Prod Mgr	Approval QC Inspector

Part No: _____ PAR #: _____ Fault Category: _____ NCR: Yes No DQA: _____ Date: _____

Resolution: _____ Disposition: _____ QA: N/C Closed: _____ Date: _____

NCR:		WORK ORDER NON-CONFORMANCE (NCR)						
DATE	STEP	Description of NC Section A	Corrective Action Section B			Verification Section C	Approval Chief Eng	Approval QC Inspector
			Initial Chief Eng	Action Description Chief Eng	Sign & Date			

NOTE: Date & initial all entries

H:\fFORMS\Quality Assurance\approved QA\NCRWO RevE

Picklist Print

May 19, 2010 1:24:06 PM

Work Order ID: 58912

Parent Item: D2362-7

Parent Item Name: Support Bracket

Start Date: 5/19/10 **Required Date:** 5/25/10

Comments: IPP: B□98.12.15□Re-format, Added Inspection Levels □DM□

Start Qty: 4.00 **Required Qty:** 4.00

Component Item ID/ Item Name	Replacement Item ID	Mfg/ Purch	Bin Item	Primary Location	Last Location	Route Seq ID	Unit of Measure	Qty on Hand	Qty per Kit	Qty Issued	Date Issued	Status
D2265 Step Bracket		Manufactured	No				Each	136.0000	1			

Location	Loc Qty	Loc Code
ST482	136	
~~37477~~	42	
44114	94	

MW 10/06/02

4

Dart Aerospace Ltd

W/O:		WORK ORDER CHANGES					
DATE	STEP	PROCEDURE CHANGE	By	Date	Qty	Approval Chief Eng / Prod Mgr	Approval QC Inspector

Part No: _____ PAR #: _____ Fault Category: _____ NCR: Yes No DQA: _____ Date: _____

Resolution: _____ Disposition: _____ QA: N/C Closed: _____ Date: _____

NCR:		WORK ORDER NON-CONFORMANCE (NCR)						
DATE	STEP	Description of NC Section A	Corrective Action Section B			Verification Section C	Approval Chief Eng	Approval QC Inspector
			Initial Chief Eng	Action Description Chief Eng	Sign & Date			

NOTE: Date & initial all entries

H:\fFORMS\Quality Assurance\approved QA\NCRWO RevE

DART AEROSPACE LTD	Work Order:	5842
Description: Step Support Bracket	Part Number:	D2362-7
Inspection Dwg: D2362 **Rev:** E1		Page 1 of 1

FIRST ARTICLE INSPECTION CHECKLIST

[X] First Article [ ] Prototype

Drawing Dimension	Tolerance	Actual Dimension	Accept	Reject	Method of Inspection	Comments
Ø0.257	+/-0.005	0.261	✓			
1.500	+/-0.010	1.500	✓			
3.074	+/-0.010	3.069	✓			
0.34	+/-0.030	0.342	✓			

Measured by:		Audited by:		Prototype Approval:	N/A
Date:	10/05/03	Date:	10/06/03	Date:	N/A

Rev	Date	Change	Revised by	Approved
A	03.11.11	New Issue	KJ/JLM	
B	04.06.10	Remove 0.339 & replace with 0.34	KJ/JLM	

E1	03.10.07	TOLERANCE CHANGE

RELEASED 98.12.14

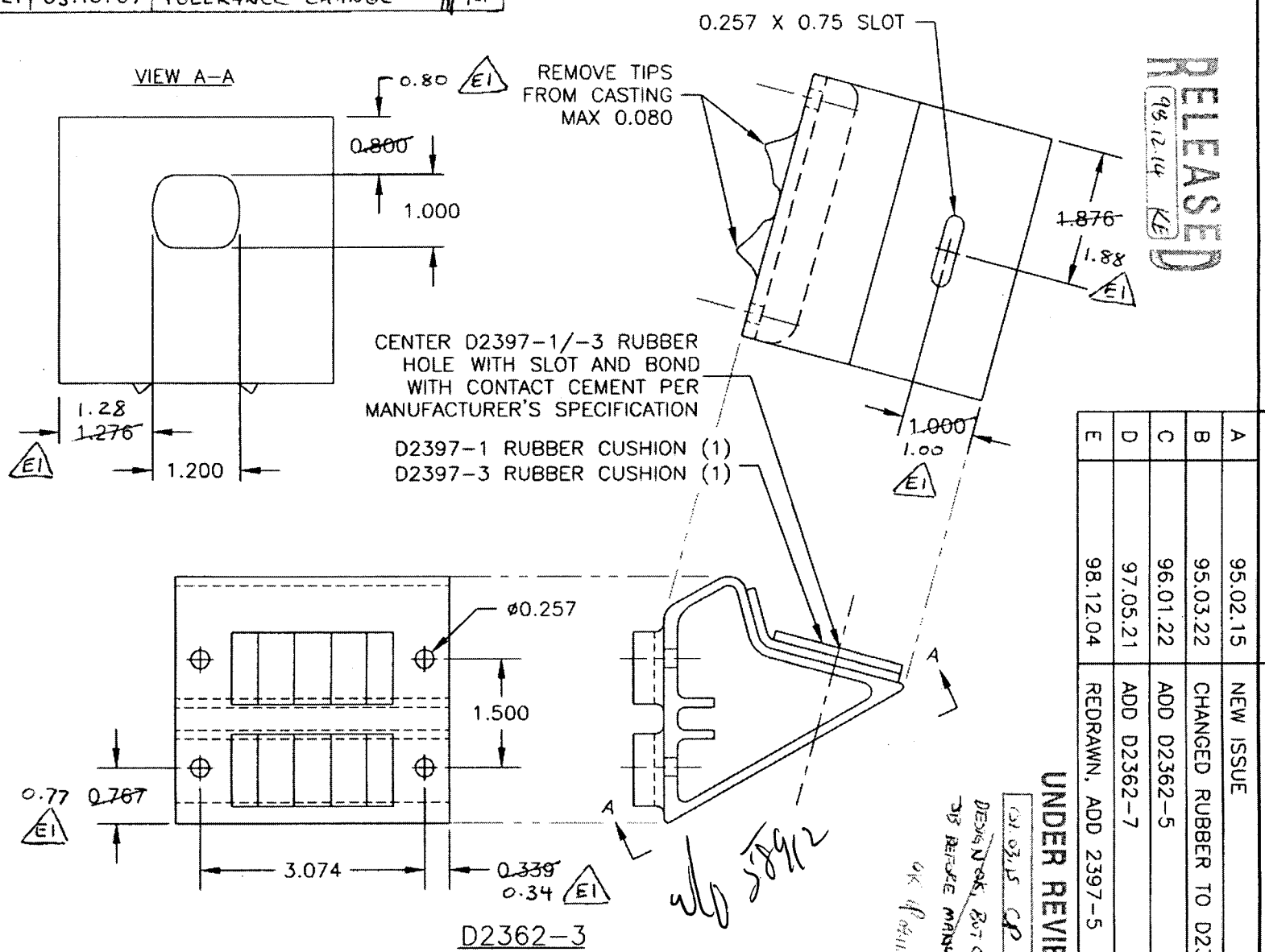

UNDER REVIEW

DESIGN OK, BUT CHECK WITH JB BEFORE MANUFACTURE

A	95.02.15	NEW ISSUE
B	95.03.22	CHANGED RUBBER TO D2397
C	96.01.22	ADD D2362–5
D	97.05.21	ADD D2362–7
E	98.12.04	REDRAWN, ADD 2397–5

DART AEROSPACE LTD
HAWKESBURY, ONTARIO, CANADA

DESIGN BW	DRAWN BY	DRAWING NO. D2362	REV. E
CHECKED	APPROVED	TITLE STEP SUPPORT BRACKET	SHEET 1 OF 3
DATE 98.12.04			SCALE 1:2

NOTES:
MAKE FROM D2265
FINISH: POWDER COAT WHITE (REF. 4.3.5.1) PER DART QSI 005 4.3 BEFORE BONDING RUBBER IN PLACE
TOLERANCES ARE PER DART QSI 018 UNLESS OTHERWISE NOTED

Copyright 1995 by DART AEROSPACE LTD

Dart Aerospace Ltd

W/O:		WORK ORDER CHANGES					
DATE	STEP	PROCEDURE CHANGE	By	Date	Qty	Approval Chief Eng / Prod Mgr	Approval QC Inspector

Part No: _____ **PAR #:** _____ **Fault Category:** _____ **NCR:** Yes No **DQA:** _____ **Date:** _____

Resolution: _____ **Disposition:** _____ **QA: N/C Closed:** _____ **Date:** _____

NCR:		WORK ORDER NON-CONFORMANCE (NCR)						
DATE	STEP	Description of NC Section A	Corrective Action Section B			Verification Section C	Approval Chief Eng	Approval QC Inspector
			Initial Chief Eng	Action Description Chief Eng	Sign & Date			

NOTE: Date & initial all entries

H:\fFORMS\Quality Assurance\approved QA\NCRWO RevE

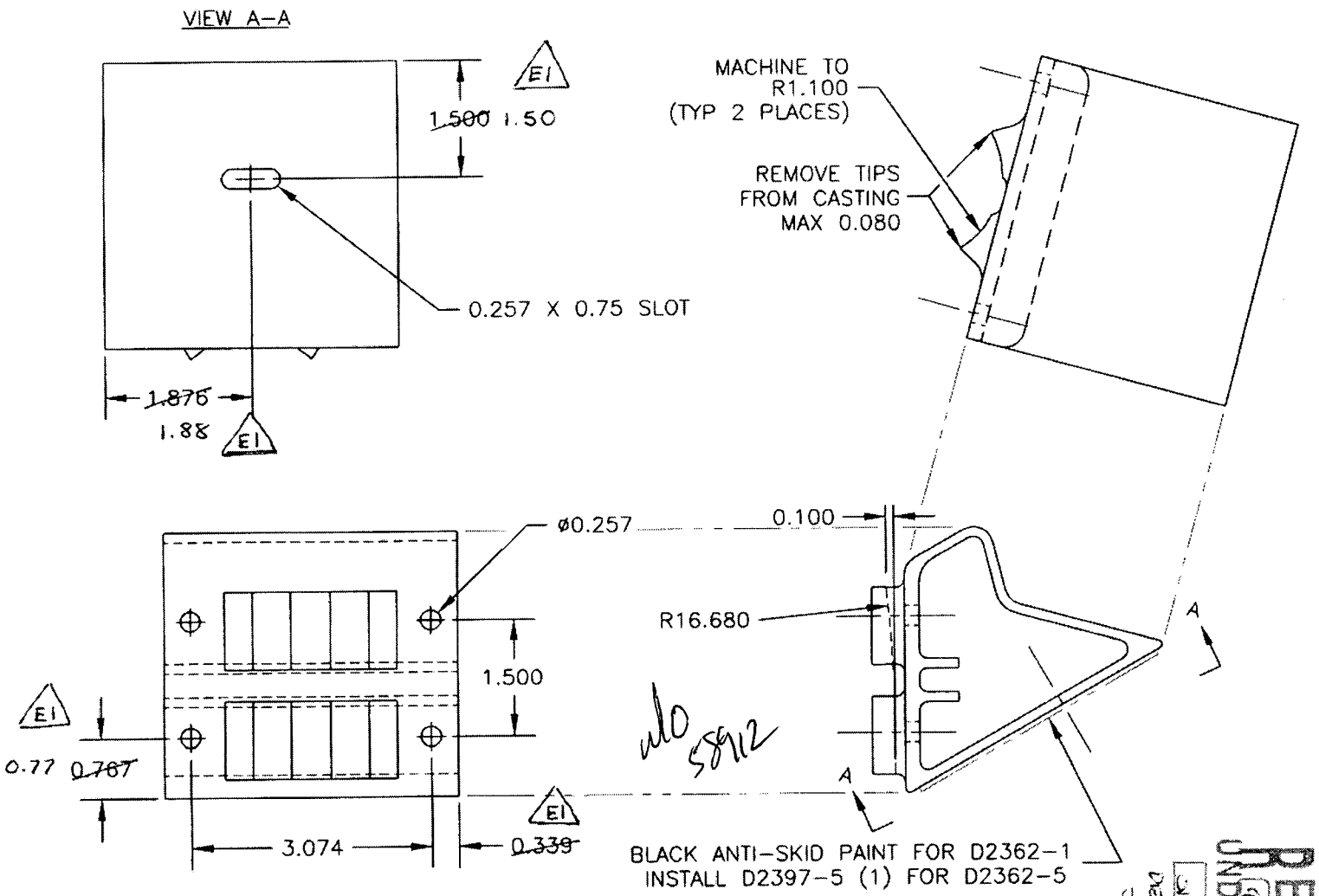

D2362-1 & D2362-5

NOTES:
MAKE FROM D2265
D2362-1: BLACK ANTI-SKID PAINT PER DART QSI 005 4.4
D2362-5: INSTALL D2397-5 RUBBER CUSHION. ALIGN RUBBER HOLE WITH SLOT AND BOND USING CONTACT CEMENT PER MANUFACTURER'S SPECIFICATION
FINISH: POWDER COAT WHITE (REF. 4.3.5.1) PER QSI 005 4.3 BEFORE ANTI-SKID PAINT OR BEFORE INSTALLING D2397-5
TOLERANCES ARE PER DART QSI 018 UNLESS OTHERWISE NOTED

RELEASED UNDER REVIEW

DESIGN BW	DRAWN BY	DART AEROSPACE LTD HAWKESBURY, ONTARIO, CANADA	
CHECKED	APPROVED	DRAWING NO. D2362	REV. E
DATE 98.12.04		TITLE STEP SUPPORT BRACKET	SHEET 2 OF 3
			SCALE 1:2

Copyright 1995 by DART AEROSPACE LTD

Dart Aerospace Ltd

W/O:		WORK ORDER CHANGES					
DATE	STEP	PROCEDURE CHANGE	By	Date	Qty	Approval Chief Eng / Prod Mgr	Approval QC Inspector

Part No: _____ **PAR #:** _____ **Fault Category:** _____ **NCR:** Yes No **DQA:** _____ **Date:** _____

Resolution: _____ **Disposition:** _____ **QA: N/C Closed:** _____ **Date:** _____

NCR:		WORK ORDER NON-CONFORMANCE (NCR)						
DATE	STEP	Description of NC Section A	Corrective Action Section B			Verification Section C	Approval Chief Eng	Approval QC Inspector
			Initial Chief Eng	Action Description Chief Eng	Sign & Date			

NOTE: Date & initial all entries

H:\fFORMS\Quality Assurance\approved QA\NCRWO RevE

D2362-041 (SHOWN)
FINISH: POWDER COAT WHITE (REF. 4.3.5.1) PER QSI 005 4.3
ANTI-SKID PIANT PER QSI 005 4.4 AFTER POWDER COATING

D2362-7 (SHOWN AS PART OF D2362-041)
MAKE FROM D2265 CASTING. DRILL D2265 AS SHOWN IN D2362-041 ASSEMBLY

NOTES:
TOLERANCES ARE PER DART QSI 018 UNLESS OTHERWISE NOTED

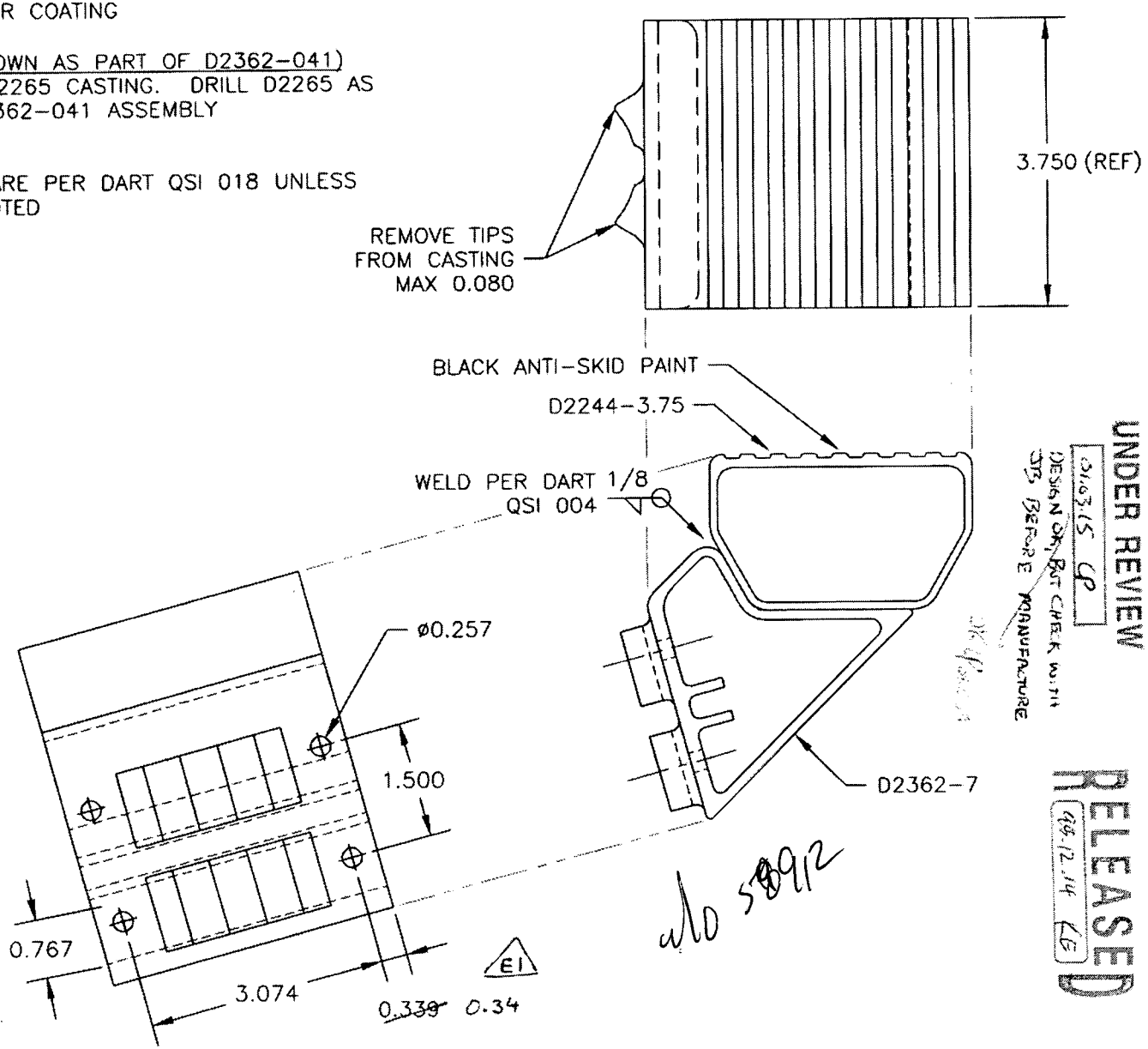

UNDER REVIEW
DESIGN OK, BUT CHECK WITH JIG BEFORE MANUFACTURE

RELEASED

w/o 58912

DESIGN BW	DRAWN BY	DART AEROSPACE LTD HAWKESBURY, ONTARIO, CANADA	
CHECKED	APPROVED	DRAWING NO. D2362	REV. E
DATE 98.12.04		TITLE STEP SUPPORT BRACKET	SHEET 3 OF 3
			SCALE 1:2

Copyright 1995 by DART AEROSPACE LTD

Dart Aerospace Ltd

W/O:		WORK ORDER CHANGES					
DATE	STEP	PROCEDURE CHANGE	By	Date	Qty	Approval Chief Eng / Prod Mgr	Approval QC Inspector

Part No: _____ PAR #: _____ Fault Category: _____ NCR: Yes No DQA: _____ Date: _____

Resolution: _____ Disposition: _____ QA: N/C Closed: _____ Date: _____

NCR:		WORK ORDER NON-CONFORMANCE (NCR)						
DATE	STEP	Description of NC Section A	Corrective Action Section B			Verification Section C	Approval Chief Eng	Approval QC Inspector
			Initial Chief Eng	Action Description Chief Eng	Sign & Date			

NOTE: Date & initial all entries

H:\fFORMS\Quality Assurance\approved QA\NCRWO RevE